NER GROUP CO.,LIMITED

Yantai Bonway Manufacturer Co.,Ltd

RV 系列蜗轮减速器
RVseries worm–gear speed reducer

RV系列蜗轮减速器简介
Brif introduction of RVseries worm–gear speed reducer

RV系列蜗轮减速器是在本厂原有WJ系列产品的基础下、融合国内外先进的技术研制开发而成的新一代产品。外形采用先进的方箱形结构。机体采用优质的铝合金压铸成型，体积小、重量轻、散热快、不生锈、美观耐用；输出扭矩大；传动平稳、噪音小；可适应全方位安装。

RV series worm-gear speed reducer is a new -generation of products developed by our facory on the basis of perfecting WJ series products with compromise of advanced technolo- gy both at home and abroad itsappearance adpots advanced square box type structure. Its outer body is made of high-quality aluminium alloy die casting into forming. It's small in volume, light weight, hight in radiating efficency, large in output torque, smooth in run-

RV

型号及标记 Mood & mark

RV 063 – 40 E F1 SZ TA B3–71B5

- B3–71B5：电机机座号和安装结构形式
  Motor mounting facility
- B3：安装方位代号
  Installation position code
- TA：扭力臂，不标注时为不带扭力臂
  Torque arm, no mark means without torque arm
- SZ：带双向输出轴，标注“DZ”为带单向输出轴，不标注时为孔输出
  Tow–way shaft output, "DZ" mark mean one–way shaft output,and no mark means hole output
- F1：带输出法兰，标注“FH”为带高的输出法兰，不标注时为不带输出法兰
  Flange output,"FH" mark mean high flange output,and no mark means flangeless output
- E：带蜗杆同向输出轴，不标注时为不带蜗杆同向输出轴
  Double extension worm shaft, no mark means single extension worm shaft
- 40：蜗轮减速器速比
  Speed ratio of worm–gear speed reducer
- 063：蜗轮减速器中心距
  Centre–to–centre spacing of worm–gear speed reducer
- RV：蜗轮减速器代号
  Code of worm–gear speed reducer

NMRV 为带输入法兰孔输入，NRV为不带输入法兰轴输入
NMRV mark mean Geared Motor, NRV mark means Gear Reducer

安装方位图
Installation position diagram

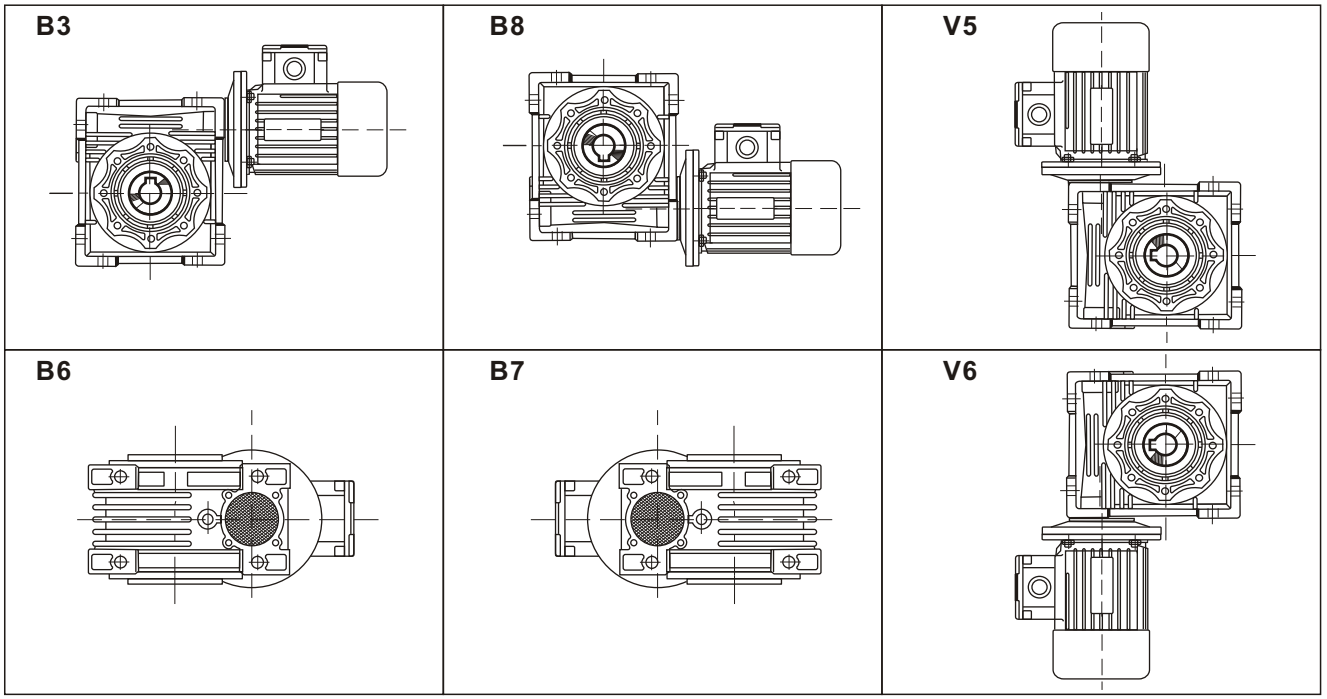

输出法兰位置图
Position diagram for output flange

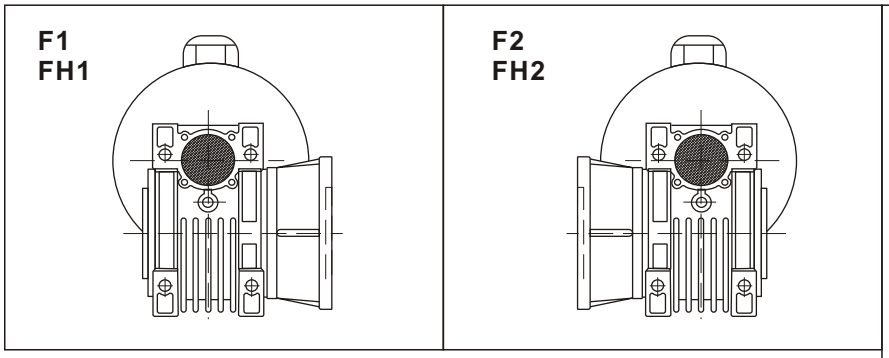

使用扭力臂
Use torque arm

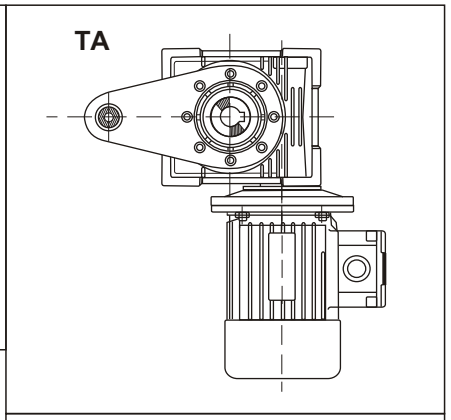

单向输出轴位置图
Position diagram for one–way output shaft

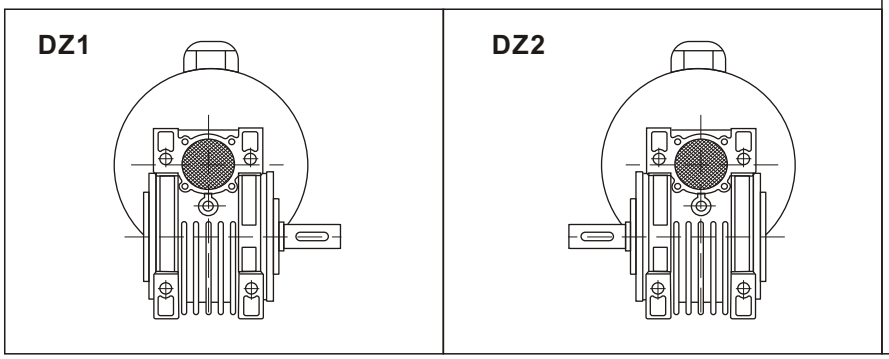

电机安装方位图
motor Installaton position diagram

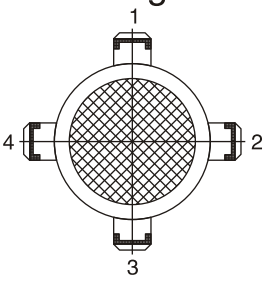

RV 性能参数
RV performance parameter

	型号Model	i	n2 rpm	M2 N.M
0.06KW 4P n1=1400 r/min	RV030	7.5	187	2.6
	RV030	10	140	3.4
	RV030	15	93	4.7
	RV030	20	70	6
	RV030	25	56	7
	RV030	30	47	8
	RV030	40	35	9.7
	RV030	50	28	11.3
	RV040	50	28	12.7
	RV030	60	23	12.5
	RV040	60	23	14.2
	RV030	80	18	12.5
	RV040	80	18	17
	RV040	100	14	19.2
0.09KW 4P n1=1400 r/min	RV030	7.5	187	3.9
	RV030	10	140	5
	RV030	15	93	7.1
	RV030	20	70	9
	RV030	25	56	10.4
	RV030	30	47	12
	RV030	40	35	14.5
	RV030	50	28	16.9
	RV040	50	28	19
	RV030	60	23	16.9
	RV040	60	23	21.4
	RV040	80	18	25.5
	RV040	100	14	28.9
0.12KW 4P n1=1400 r/min	RV030	7.5	187	5.2
	RV040	7.5	186	5.3
	RV030	10	140	6.7
	RV040	10	140	7
	RV030	15	93	9.5
	RV040	15	93	10.1
	RV030	20	70	12
	RV040	20	70	12.8
	RV030	25	56	13.9
	RV040	25	56	15.3
	RV030	30	47	16
	RV040	30	47	17.2
	RV030	40	35	17
	RV040	40	35	21.3
	RV050	40	35	21.9
	RV040	50	28	25.4
	RV050	50	28	25.8

	型号Model	i	n2 rpm	M2 n.M
0.12KW 4P n1=1400 r/min	RV040	60	23	28.5
	RV050	60	23	29
	RV040	80	18	34.1
	RV050	80	18	34.7
	RV050	100	14	40.1
0.18KW 4P n1=1400 r/min	RV030	7.5	187	8
	RV040	7.5	187	8
	RV030	10	140	10
	RV040	10	140	10
	RV030	15	93	14
	RV040	15	93	15
	RV030	20	70	18
	RV040	20	70	19
	RV030	25	56	20
	RV040	25	56	23
	RV040	30	47	26
	RV040	40	35	32
	RV050	40	35	32
	RV040	50	28	38
	RV050	50	28	38
	RV040	60	23	34
	RV050	60	23	34
	RV050	80	18	53
	RV050	100	14	55
0.25KW 4P n1=1400 r/min	RV040	7.5	187	11
	RV050	7.5	187	11
	RV040	10	140	14
	RV050	10	140	14
	RV040	15	93	20
	Rv050	15	93	21
	RV040	20	70	26
	RV050	20	70	26
	RV040	25	56	31
	RV050	25	56	32
	RV040	30	47	36
	RV050	30	47	36
	RV040	40	35	44
	RV050	40	35	45
	RV050	50	28	53
	RV050	60	23	60
	RV050	80	18	65
	RV063	80	18	77
	RV050	100	14	55
	RV063	100	14	85

RV 性能参数
RV performance parameter

	型号Model	i	n2 rpm	M2 N.M
0.37KW 4P n1=1400 r/min	RV040	7.5	187	16
	RV050	7.5	187	16
	RV040	10	140	21
	RV050	10	140	21
	RV040	15	93	30
	RV050	15	93	31
	RV040	20	70	39
	RV050	20	70	39
	RV050	25	56	47
	RV050	30	47	54
	RV050	40	35	66
	RV050	50	28	73
	RV063	50	28	83
	RV063	60	23	95
	RV063	80	18	114
	RV063	100	14	118
	RV075	100	14	118
0.55KW 4P n1=1400 r/min	RV050	7.5	187	25
	RV050	10	140	32
	RV050	15	93	46
	RV063	15	93	46
	RV050	20	70	59
	RV063	20	70	60
	RV063	25	56	72
	RV063	30	47	80
	RV063	40	35	104
	RV075	40	35	108
	RV063	50	28	123
	RV075	50	28	129
	RV075	60	23	146
	RV075	80	18	180
	RV075	100	14	180
0.75KW 4P n1=1400 r/min	RV050	7.5	187	34
	RV063	7.5	187	33
	RV050	10	140	44
	RV063	10	140	44
	RV050	15	93	63
	RV063	15	93	63
	RV063	20	70	82
	RV063	25	56	99
	RV063	30	47	109
	RV075	30	47	116
	RV063	40	35	143

	型号Model	i	n2 rpm	M2 N.M
0.75KW 4P n1=1400 r/min	RV075	40	35	147
	RV075	50	28	176
	RV090	50	28	184
	RV075	60	23	200
	RV090	60	23	212
	RV075	80	18	242
	RV090	80	18	257
	RV090	100	14	270
	RV110	100	14	313
1.1KW 4P n1=1400 r/min	RV063	7.5	187	49
	RV075	7.5	187	49
	RV063	10	140	65
	RV075	10	140	66
	RV063	15	93	93
	RV075	15	93	95
	RV063	20	70	121
	RV075	20	70	122
	RV063	25	56	145
	RV075	25	56	149
	RV075	30	47	170
	RV075	40	35	216
	RV090	40	35	225
	RV090	50	28	271
	RV090	60	23	311
	RV110	60	23	324
	RV110	80	18	410
	RV110	100	14	460
1.5KW 4P n1=1400 r/min	RV075	7.5	187	67
	RV075	10	140	90
	RV075	15	93	130
	RV075	20	70	167
	RV075	25	56	200
	RV090	25	56	209
	RV075	30	47	230
	RV090	30	47	236
	RV090	40	35	306
	RV090	50	28	369
	RV110	50	28	375
	RV090	60	23	424
	RV110	60	23	442
	RV110	80	18	490
	RV130	80	18	547
	RV130	100	14	652

RV 性能参数
RV performance parameter

	型号Model	i	n2 rpm	M2 N.M
2.2KW 4P n1=1400 r/min	RV075	7.5	187	94
	RV090	7.5	187	101
	RV110	7.5	187	101
	RV090	10	140	133
	RV110	10	140	133
	RV090	15	93	193
	RV110	15	93	192
	RV090	20	70	251
	RV110	20	70	256
	RV090	25	56	307
	RV110	25	56	316
	RV090	30	47	346
	RV110	30	47	355
	RV110	40	35	462
	RV110	50	28	550
	RV130	50	28	567
	RV110	60	23	648
	RV130	60	23	660
	RV130	80	18	803
3.0KW 4P n1=1400 r/min	RV110	7.5	187	138
	RV110	10	140	182
	RV110	15	93	263
	RV110	20	70	350
	RV110	25	56	431
	RV110	30	47	484
	RV110	40	35	631
	RV130	40	35	642
	RV130	50	28	773
	RV130	60	23	900

	型号Model	i	n2 rpm	M2 N.M
4.0KW 4P n1=1400 r/min	RV110	7.5	187	184
	RV130	7.5	187	186
	RV110	10	140	243
	RV130	10	140	242
	RV110	15	93	352
	RV130	15	93	357
	RV110	20	70	464
	RV130	20	70	466
	RV110	25	56	573
	RV130	25	56	572
	RV110	30	47	646
	RV130	30	47	655
	RV130	40	35	857
	RV130	50	28	980
5.5KW 4P n1=1400 r/min	RV110	7.5	187	253
	RV130	7.5	187	256
	RV110	10	140	334
	RV130	10	140	334
	RV110	15	93	484
	RV130	15	93	490
	RV130	20	70	645
	RV130	25	56	788
	RV130	30	47	900
7.5KW 4P n1=1400 r/min	RV110	7.5	187	345
	RV130	7.5	187	349
	RV110	10	140	455
	RV130	10	140	455
	RV130	15	93	667
	RV130	20	70	880
	RV130	25	56	1074

输出轴最大径向力
Max forec on output shaft along diameter (N)

	n2	RV030	RV040	RV050	RV063	RV075	RV090	RV110	RV130
7.5	187	695	1338	1845	2395	2816	3121	3939	5151
10	140	762	1460	2018	2614	3078	3408	4302	5628
15	93	876	1672	2321	3004	3540	3922	4945	6463
20	70	962	1845	2557	3315	3902	4325	5657	7130
25	56	1030	1976	2738	3550	4178	4630	5844	7636
30	47	1097	2102	2913	3775	4443	4922	6213	8122
40	35	1216	2323	3223	4173	4913	5440	6866	8980
50	28	1310	2496	3466	4486	5282	5846	7380	9652
60	23	1414	2692	3739	4840	5698	6308	7962	10414
80	18	1574	2999	4162	5390	6345	7028	8869	11601
100	14	1702	3244	4501	5830	6862	7604	9594	12550

电机直联尺寸
Motor mounting facility

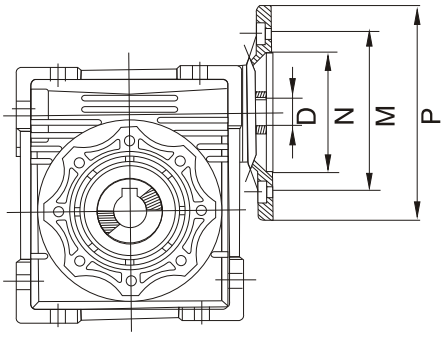

型号Model	PAM IEC	N	M	P	7.5	10	15	20	25	30	40	50	60	80	100
					D										
NMRV030	63B5	95	115	140	11	11	11	11	11	11	11	-	-	-	-
	63B14	60	75	90											
	56B5	80	100	120	9	9	9	9	9	9	9	9	9	9	-
	56B14	50	65	80											
NMRV040	71B5	110	130	160	14	14	14	14	14	14	14	-	-	-	-
	71B14	70	85	105											
	63B5	95	115	140	11	11	11	11	11	11	11	11	11	11	-
	63B14	60	75	90											
	56B5	80	100	120	-	-	-	-	-	-	-	9	9	9	9
NMRV050	80B5	130	165	200	19	19	19	19	-	-	-	-	-	-	-
	80B14	80	100	120											
	71B5	110	130	160	14	14	14	14	14	14	14	14	14	14	14
	71B14	70	85	105											
	63B5	95	115	140	-	-	-	-	-	-	11	11	11	11	11
NMRV063	90B5	130	165	200	24	24	24	24	24	-	-	-	-	-	-
	90B14	95	115	140											
	80B5	130	165	200	19	19	19	19	19	19	19	19	-	-	-
	80B14	80	100	120											
	71B5	110	130	160	-	-	-	-	-	-	-	14	14	14	14
	71B14	70	85	105											
NMRV075	100/112B5	180	215	250	28	-	-	-	-	-	-	-	-	-	-
	100/112B14	110	130	160											
	90B5	130	165	200	24	24	24	24	24	24	24	-	-	-	-
	90B14	95	115	140											
	80B5	130	165	200	-	-	-	-	-	-	19	19	19	19	19
	80B14	80	100	120											
	71B5	110	130	160	-	-	-	-	-	-	-	-	-	-	14
NMRV090	100/112B5	180	215	250	28	28	28	28	28	28	-	-	-	-	-
	100/112B14	110	130	160											
	90B5	130	165	200	-	-	-	-	24	24	24	24	24	-	-
	90B14	95	115	140											
	80B5	130	165	200	-	-	-	-	-	-	-	19	19	19	19
	80B14	80	100	120											
NMRV110	132B5	230	265	300	38	38	38	-	-	-	-	-	-	-	-
	100/112B5	180	215	250	28	28	28	28	28	28	28	28	28	-	-
	90B5	130	165	200	-	-	-	-	-	-	-	24	24	24	24
	80B5	130	165	200	-	-	-	-	-	-	-	-	-	-	19
NMRV130	132B5	230	265	300	38	38	38	38	38	38	-	-	-	-	-
	100/112B5	180	215	250	-	-	-	-	-	-	28	28	28	28	-
	90B5	130	165	200	-	-	-	-	-	-	-	-	-	24	24

RV 外型及安装尺寸
RV outline & installation sizes

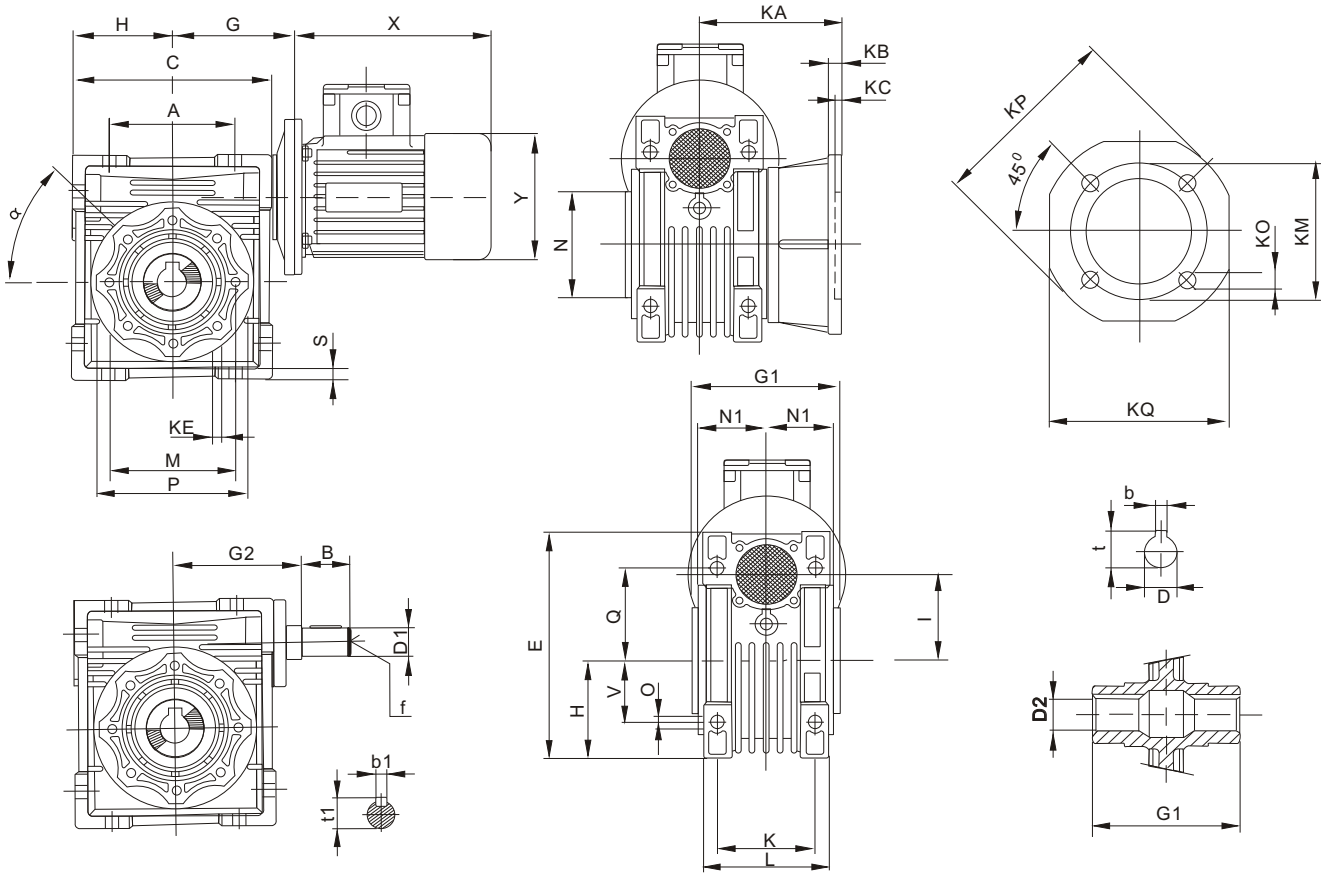

	A	B	C	D(H8)	D1(j6)	D2	E	G	G1	G2	H	I	L	M	N(h8)	N1	O	P	Q
030	54	20	80	14	9	25	97	55	63	51	40	30	56	65	55	29	6.5	75	44
040	70	23	100	19	11	30	121.5	70	78	60	50	40	71	75	60	36.5	6.5	87	55
050	80	30	120	25	14	40	144	80	92	74	60	50	85	85	70	43.5	8.5	100	64
063	100	40	144	25	19	45	174	95	112	90	72	63	103	95	80	53	8.5	110	80
075	120	50	172	28	24	50	205	112.5	120	105	86	75	112	115	95	57	11	140	93
090	140	50	208	35	24	60	238	129.5	140	125	103	90	130	130	110	67	13	160	102
110	170	60	252.5	42	28	65	295	160	155	142	127.5	110	144	165	130	74	14	200	125
130	200	80	292.5	45	30	75	335	180	170	162	147.5	130	155	215	180	81	16	250	140

	S	T	V	K	KA		KB	KC	KE	α	KM	KN(H8)	KO	KP	KQ	b	b1	f	t	t1
					F	FH														
030	5.5	21	27	44	54.5	-	6	4	M6X11(4)	0^0	68	50	6.5(4)	80	70	5	3	-	16.3	10.2
040	6.5	26	35	60	67	97	7	4	M6X8(4)	45^0	87	60	9(4)	110	95	6	4	-	21.8	12.5
050	7	30	40	70	90	120	9	5	M8X10(4)	45^0	90	70	11(4)	125	110	8	5	M6	28.3	16
063	8	36	50	85	82	112	10	6	M8X14(8)	45^0	150	115	11(4)	180	142	8	6	M6	28.3	21.5
075	10	40	60	90	111	-	13	6	M8X14(8)	45^0	165	130	14(4)	200	170	8	8	M8	31.3	27
090	11	45	70	100	111	-	13	6	M10X18(8)	45^0	175	152	14(4)	210	200	10	8	M8	38.3	27
110	14	50	85	115	131	-	15	6	M10X18(8)	45^0	230	170	14(4)	280	260	12	8	M10	45.3	31
130	15	60	100	120	140	-	15	6	M12X21(8)	45^0	255	180	16(8)	320	290	14	8	M10	48.8	33

RV 蜗轮减速器悬挂式安装
RV Susppended installation of woem– gearspeed reducer

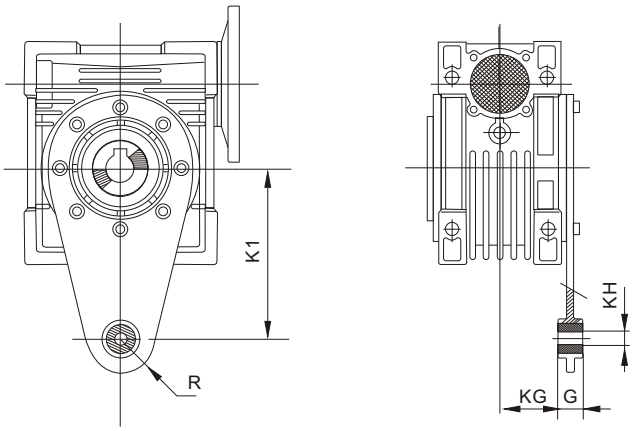

	K1	G	KG	KH	R
NMRV030	85	14	24	8	15
NMRV040	100	14	31.5	10	18
NMRV050	100	14	38.5	10	18
NMRV063	150	14	49	10	18
NMRV075	200	25	47.5	20	30
NMRV090	200	25	57.5	20	30
NMRV110	250	30	62	25	35
NMRV130	250	30	69	25	35

RV 单向、双向输出轴尺寸
RV Sizes of single and double extension output shaft

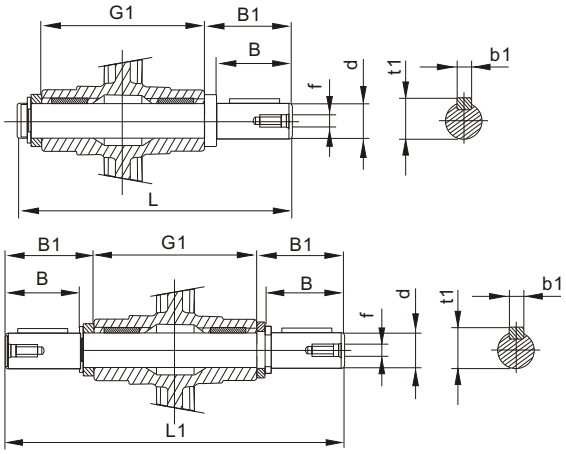

	d(h6)	B	B1	G1	L	L1	F	b1	t1
NMRV030	14	30	32.5	63	102	128	M6	5	16
NMRV040	19	40	43	78	128	164	M6	6	20.5
NMRV050	25	50	53.5	92	153	199	M10	8	28
NMRV063	25	50	53.5	112	173	219	M10	8	28
NMRV075	28	60	63.5	120	192	247	M10	8	31
NMRV090	35	80	84.5	140	234	309	M12	10	38
NMRV110	42	80	84.5	155	249	324	M16	12	45
NMRV130	45	80	85	170	265	340	M16	14	48.5

RV 蜗杆同向输出轴尺寸
RV double extension worm shaft

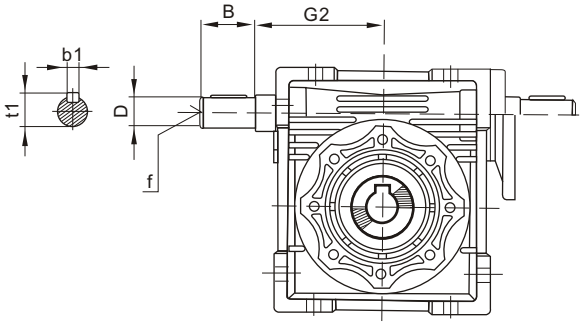

	B	D(j6)	G2	F	B1	T1
NMRV030	20	9	45	-	3	10.2
NMRV040	23	11	53	-	4	12.5
NMRV050	30	14	64	M6	5	16
NMRV063	40	19	75	M6	6	21.5
NMRV075	50	24	90	M8	8	27
NMRV090	50	24	108	M8	8	27
NMRV110	60	28	135	M10	8	31
NMRV130	80	30	155	M10	8	33

NMRV 双蜗轮减速器组合
NMRV Combination of double worm–gear speed reducer

NMRV/NMRV 型号及标记
NMRV/NMRV Mood & mark

NMRV 040/090 – 600 E F1 SZ TA SB1 – 71B5

- 71B5：电机机座号和安装结构形式 / Motor mounting facility
- SB1：安装方位代号 / Installation position code
- TA：扭力臂，不标注时为不带扭力臂 / Torque arm, no mark means without torque arm
- SZ：带双向输出轴，标注“DZ”为带单向输出轴，不标注时为孔输出 / Tow–way shaft output, "DZ" mark mean one–way shaft output, and no mark means hole output
- F1：带输出法兰，标注“FH”为高的输出法兰，不标注时为不带输出法兰 / Flange output,"FH" mark mean high flange output,and no mark means flangeless output
- E：带蜗杆同向输出轴，不标注时为不带蜗杆同向输出轴 / Double extension worm shaft, no mark means single extension worm shaft
- 600：蜗轮减速器速比 / Speed ratio of worm–gear speed reducer
- 040/090：蜗轮减速器中心距 / Centre–to–centre spacing of worm–gear speed reducer
- NMRV：蜗轮减速器代号 / Code of worm–gear speed reducer

NMRV 为带输入法兰孔输入，NRV为不带输入法兰轴输入
NMRV mark mean Geared Motor, NRV mark means Gear Reducer

安装方位图
Installation position diagram

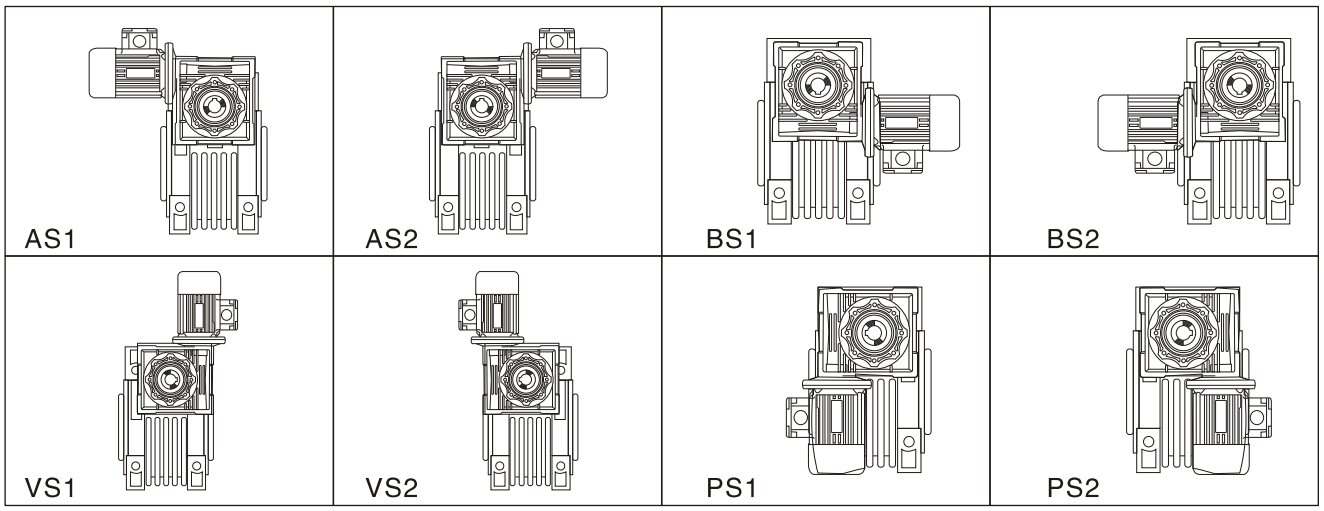

性能参数
performance parameter

型号Model	i	n2 rpm	KW	M2 n.M	i1	i2
NMRV 030/040 n1=1400 r/min	300	4.7	0.09	70	10	30
	400	3.5	0.06	63	10	40
	500	2.8		57	20	25
	600	2.3		72	20	30
	750	1.9		72	25	30
	900	1.6		73	30	30
	1200	1.2		65	30	40
	1500	0.9		73	50	30
	1800	0.8		73	60	30
	2400	0.6		65	60	40
	3200	0.4		65	80	40
NMRV 030/050 n1=1400 r/min	300	4.7	0.18	142	10	30
	400	3.5	0.12	127	10	40
	500	2.8	0.09	123	10	50
	600	2.3		143	20	30
	750	1.9		148	25	30
	900	1.6	0.06	141	30	30
	1200	1.2		118	30	40
	1500	0.9		139	50	30
	1800	0.8		155	60	30
	2400	0.6		124	60	40
	3000	0.5		120	60	50
	6400	0.2		131	80	80
NMRV 030/063 n1=1400 r/min	300	4.7	0.25	210	7.5	40
	400	3.5	0.18	222	10	40
	500	2.8		205	10	50
	600	2.3	0.12	208	15	40
	750	1.9		216	15	50
	900	1.6	0.09	200	15	60
	1200	1.2		236	30	40
	1500	0.9	0.06	204	30	50
	1800	0.8		202	30	60
	2400	0.6		220	60	40
	3000	0.5		223	60	50
	6400	0.2		262	80	80
	8000	0.17		262	100	80

型号Model	i	n2 rpm	KW	M2 n.M	i1	i2
NMRV 040/075 n1=1400 r/min	300	4.7	0.37	405	10	30
	400	3.5	0.25	336	10	40
	500	2.8		307	10	50
	600	2.3	0.18	362	20	30
	750	1.9		391	25	30
	900	1.6	0.12	325	30	30
	1200	1.2		359	30	40
	1500	0.9	0.09	360	50	30
	1800	0.8		404	60	30
	2400	0.6	0.06	330	60	40
	3000	0.5		301	60	50
	6400	0.2		393	80	80
	8000	0.17		393	100	80
	10000	0.14		409	100	100
NMRV 040/090 n1=1400 r/min	300	4.7	0.37	402	7.5	40
	400	3.5		523	10	40
	500	2.8		550	10	50
	600	2.3		605	15	40
	750	1.9	0.25	538	15	50
	900	1.6		533	15	60
	1200	1.2	0.18	629	30	40
	1500	0.9		588	30	50
	1800	0.8	0.12	492	30	60
	2400	0.6		625	60	40
	3000	0.5	0.09	548	60	50
	6400	0.2		589	80	80
	8000	0.17		589	100	80
	10000	0.14		614	100	100
NMRV 050/063 n1=1400 r/min	300	4.7	0.25	210	7.5	40
	400	3.5	0.18	222	10	40
	500	2.8		205	10	50
	600	2.3	0.12	208	15	40
	750	1.9		216	15	50
	900	1.6		266	15	60
NMRV 050/075 n1=1400 r/min	300	4.7	0.37	405	10	30
	400	3.5	0.25	336	10	40
	500	2.8		304	10	50
	600	2.3	0.18	362	20	30
	750	1.9		391	25	30
	900	1.6	0.12	325	30	30
	1200	1.2		359	30	40

性能参数
performance parameter

型号Model	i	n2 rpm	KW	M2 n.M	i1	i2
NMRV 050/110 n1=1400 r/min	300	4.7	0.75	871	10	30
	400	3.5		1013	10	40
	500	2.8	0.55	984	10	50
	600	2.3		1062	15	40
	750	1.9		1128	25	30
	900	1.6	0.37	1079	30	30
	1200	1.2	0.25	943	30	40
	1500	0.9		1064	50	30
	1800	0.8		1075	60	30
	2400	0.6	0.18	1001	60	40
	3000	0.5	0.12	884	60	50
	6400	0.2		1048	80	80
	8000	0.17.		982	100	80
	10000	0.14		982	100	100
NMRV 063/090 n1=1400 r/min	300	4.7	0.37	402	7.5	40
	400	3.5		523	10	40
	500	2.8		550	10	50
	600	2.3		605	15	40
	750	1.9	0.25	538	15	50
	900	1.6		533	15	60
	1200	1.2	0.18	629	30	40
	1500	0.9		588	30	50
	1800	0.8	0.12	492	30	60
	2400	0.6		625	60	40

型号Model	i	n2 rpm	KW	M2 n.M	i1	i2
NMRV 063/130 n1=1400 r/min	300	4.7	1.50	1789	10	30
	400	3.5	1.00	1519	10	40
	500	2.8		1629	10	50
	600	2.3	0.75	163	15	40
	750	1.9		1804	25	30
	900	1.6		1826	30	30
	1200	1.2	0.55	1705	30	40
	1500	0.9	0.37	1674	50	30
	1800	0.8		1698	60	30
	2400	0.6	0.25	1624	60	40
	3000	0.5		1548	60	50
	6400	0.2		1637	80	80
	10000	0.14		1228	100	100
NMRV 075/130 n1=1400 r/min	300	4.7	1.50	1789	10	30
	400	3.5	1.00	1519	10	40
	500	2.8		1629	10	50
	600	2.3	0.75	163	15	40
	750	1.9		1804	25	30
	900	1.6		1826	30	30
	1200	1.2	0.55	1705	30	40
	1500	0.9	0.37	1674	50	30
	1800	0.8		1698	60	30
	2400	0.6	0.25	1624	60	40
	3000	0.5		1548	60	50

NMRV/NMRV 外观照片
NMRV/NMRV Outline photos

NMRV–NMRV

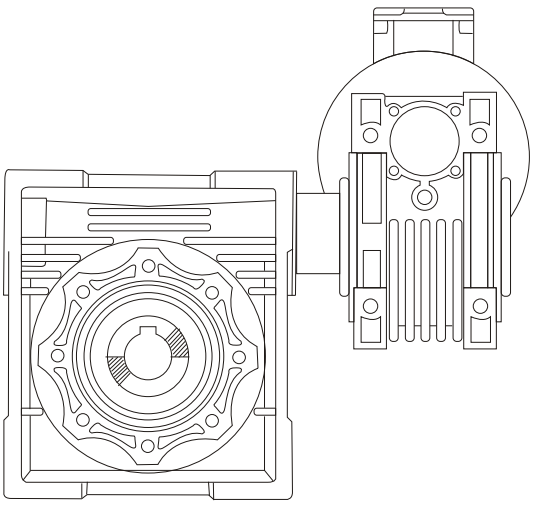

外形和安装尺寸
Outline & installation slzes

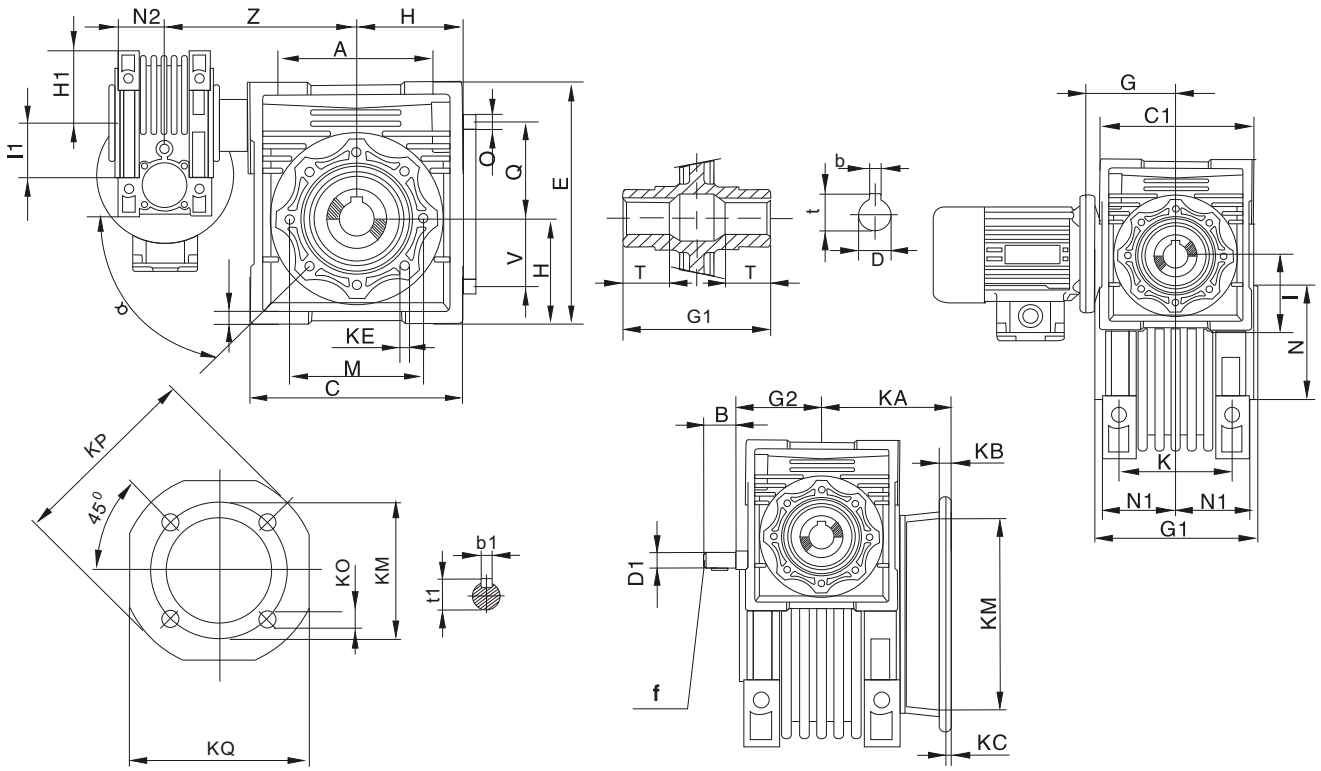

	A	B	C	C1	D(H8)	D1(j6)	E	G	G1	G2	H	H1	I	I1	M	N(h8)	N1	N2	O	P	Q
030/040	70	20	100	80	19	9	121.5	55	78	51	50	40	40	30	75	60	36.5	29	6.5	87	55
030/050	80	20	120	80	25	9	144	55	92	51	60	40	50	30	85	70	43.5	29	8.5	100	64
030/063	100	20	144	80	25	9	174	55	112	51	72	40	63	30	95	80	53	29	8.5	110	80
040/075	120	23	172	100	28	11	205	70	120	60	86	50	75	40	115	95	57	36.5	11	140	93
040/090	140	23	208	100	35	11	238	70	140	60	103	50	90	40	130	110	67	36.5	13	160	102
050/075	120	30	172	120	28	14	205	80	120	74	86	60	75	50	115	95	57	43.5	11	140	93
050/110	170	30	252.5	120	42	14	295	80	155	74	127.5	60	110	50	165	130	74	43.5	14	200	125
063/090	140	40	208	144	35	19	238	95	140	90	103	72	90	63	130	110	67	53	13	160	102
063/130	200	40	292.5	144	45	19	335	95	170	90	147.5	72	130	63	215	180	81	53	16	250	140
075/130	200	50	292.5	172	45	24	335	112.5	170	105	147.5	86	130	75	215	180	81	57	16	250	140

	S	T	V	Z	K	KA		KB	KC	KE	α	KM	KN(H8)	KO	KP	KQ	b	b1	f	t	t1
						F	FH														
030/040	6.5	26	35	120	60	67	97	7	4	M6X8(4)	45°	87	60	9(4)	110	95	6	3	-	21.8	10.2
030/050	7	30	40	130	70	90	120	9	5	M8X10(4)	45°	90	70	11(4)	125	110	8	3	-	28.3	10.2
030/063	8	36	50	145	85	82	112	10	6	M8X14(8)	45°	150	115	11(4)	180	142	8	3	-	28.3	10.2
040/075	10	40	60	165	90	111	-	13	6	M8X14(8)	45°	165	130	14(4)	200	170	8	4	-	31.3	12.5
040/090	11	45	70	182	100	111	-	13	6	M10X18(8)	45°	175	152	14(4)	210	200	10	4	-	38.3	12.5
050/075	10	40	60	165	90	111	-	13	6	M8X14(8)	45°	165	130	14(4)	200	170	8	5	M6	31.3	16
050/110	14	50	85	225	115	131	-	15	6	M10X18(8)	45°	230	170	14(4)	280	260	12	5	M6	45.3	16
063/090	11	45	70	182	100	111	-	13	6	M10X18(8)	45°	175	152	14(4)	210	200	10	6	M6	38.3	21.5
063/130	15	60	100	245	120	140	-	15	6	M12X21(8)	45°	255	180	16(8)	320	290	14	6	M6	48.8	21.5
075/130	15	60	100	270	120	140	-	15	6	M12X21(8)	45°	255	180	16(8)	320	290	14	8	M8	48.8	27

定货须知
Notice for ordering

1、订货时请根据使用需要的转速、转矩、工作系数（见下表）及结构形式，对照安装方位图，合理选择机型，写明规格型号及安装代号。订货时选择的安装方位应与实际方位一致，不然容易造成漏油影响机器的使用寿命。若安装方位特殊请另加说明。

2、选择带无级变速器的机型，为充分显示本机型的优良特性，常用转速应选择在变速范围的中间值。

3、订货时请尽量选用本目录内的标准产品，如有特殊要求或配用特殊电机请另加说明。

1.Please refer to the mounting positon diagram,make reasonable choice of model,and write down specifications and mounting code according to your required revoluting speed,torque,acivity factor, structral form on ordering. The selected mounting position should be identical with the practical one on ordering.or it will cause oil leakage and result in affecing machine service life.

2.While choosing stepless speed variator model,in order to fully show the superior characteristic of this set, the ordinary revolution should shoose amedium value within its speed regulation range.

3.Please make the best choice of standard products in this catalogue,and give an additional explanation for your special requirement and motors.

工作情况 Work circumstance	工作系数 activity factor K
均匀载荷，连续载荷，单向旋转，无惯性 Uniform load,continuous load, one–way rotation and non–inertia	1
中等冲击载荷，脉动载荷，经常反转，中等惯性 Medium impact load,pulsating load,constant counter rotation, and medium inertia	1.3
中等冲击载荷，脉动载荷，经常反转，很大惯性 Medium impact load,pulsating load,constant counter rotation and very great inertia	1.5
严重冲击载荷，脉动载荷，经常反转，很大惯性 Heavy impact load,pulsating load,constant counter rotation and very great inertia	1.75

声明：由于产品性能的不断改进，保留提高产品性能数据的权力而不另行通知。
Declaration: Owing to continuous improvement on our product performance,we reserve the right of enhancing the products performance data,Advance notice won't be given then.

减速机使用说明
The usage of speed reducer

安装 Lnstallment

正确安装是您成功使用互力蜗轮减速机良好的开端。不规范的安装，不仅使减速机效率下降，运转成本增大，而且会危害到减速机的使用寿命。本指导将会使您获得较好的效果。

一、减速机应安装在平整坚固的基础上。

二、假如减速机入力轴采用联轴器与电机直联，两者的同轴度应该一致，建议选用本公司生产的FCL型弹性柱销套联轴器或L型弹性梅花联轴器。

三、假如在减速机入力轴或出力轴上安装联轴器、链轮或齿轮，在位置许可的情况下，应该靠近入（出）力轴的端盖。

四、入（出）轴上的联轴器，链轮和齿轮与其相啮合的偶件，其垂直和水平位置的不一致性，将会影响减速机的传动效率和工作寿命。

五、入（出）力轴上端的联轴器，皮带轮、链轮和齿轮的安装，除了有合适的配合外，应柔和地装入，忌用铁锤猛敲，这样会损坏减速机内的轴承。

Normative installment is a good beginning of using HuLi worm gear speed reducer successfully.Incorrect installment will not only lead to the decline of the speed reducer ’ s efficiency and the increment of the operating cost，but also leadto operational life span of the speed reducer.The guide will be made you achieve better effect.

1、The speed reducer should be fixed on the flat and solid base.

2、If the input shaft of speed reducer is connected directly with the motor through the coupling.The two shafts should be coaxial. We recommend you to choose the FCL type flexible pin clutch coupling or L type flexible quincunx coupling manufactured by our company.

3、If we fix the coupling on the input shaft or output shaft,with the place permissively,the chain wheel or gear wheel should be close to the input(output) shaft' s tip cover.

4、The variance of vertical and horizontal place of the coupling on the input(output) shaft,chain wheel,gear wheel and their parts clenching the teeth will be affected the transmissible efficiency and operating life of the speed reducer.

5、The fixation of the coupling upward input(output)shaft,belt wheel,chain wheel and gear wheel should be enclosedgently except that they can be matched properly together.Don' t use the hammer to strike heavily;otherwise it will spoil the bearing inside the speed reducer.

使用与润滑 Installment

一、拧开加油盖，加入规定的润滑油至油窗中心高度，新机工作16小时应更换润滑油，以后每1500小时至2000小时换油一次。减速机出厂时机内无润滑油。

二、盖紧加油盖，不得弃盖使用，以防灰尘和雨水侵入。

三、卸下加油盖上通气孔小螺钉（丢弃）并检查通气孔是否畅通，至此可以开机运行使用。

四、在高温或每天24小时连续使用的工况下，载荷不得超过额定负载的70%。

五、润滑油的选用请按本公司推荐的润滑油牌号选用。

1、Twist off the oil-cover;add specified lubricant onto the center of the oil window.After the first 16 hours of operation it should be changed the lubricant.And afterwards it will be changed the lubricant every 1500 to 2000 hours.The oil container inside the speed reducer is empty when it leaves factory.

2、Twist on the oil-cover closely not to let dust and water in.Don' t use without the oil-cover.

3、Unpack the little screw of air vent on the oil cover and examine whether the air vent is unobstructed or not.Thus it can work.

4、Under the operation conditions of high temperature or 24 hours per day, the load must not surpass the 70 percent of the rated load.

5、Please choose the lubricant brand recommended by our company.

润滑油 Lubricant	环境温度Ambient temperature	
	–9~15℃	10~50℃
中国 China	N320	N460
Shell	Omala320	Omala460
Esso	Ep320	Ep460
TEXACO	Meropa320	Meropa460

RV 系列蜗轮减速器使用与保养
Opertion & maintenance of RV series worm gear speed reducer

1、蜗轮减速器开始运行200–400小时后应更换润滑油，以后的换油周期小于或等于4000小时（免维护产品除外）。出厂时已加入润滑油。

2、箱体内应保留足够的润滑油

3、RV系列蜗轮减速器适合动力传动，不能自锁。

4、透气螺母出厂时为防止搬运中漏油已旋紧，运转时须松开，严禁未松开使用。（免维护产品无须松开）

1. When worm-gear speed reducer starts to work up to 200-400 hours, its lubrication oil should be replaced, after that,the cycle of oli replcement is fixed less than or equal to 4,ooo hors. It is full filled with lubrication oil while dispatching from the factory.

2. lubricating oil should be kept enough in the casing.

3. RV series worm-gearspeed reducer is fit for power traansmission. It can't be self-lockd

4. The air screw nut is screwed up for preventing from oil leakage in moving when leaving the factory. It should be loosed when it starts to run. It is strictly forbidden to use it before loosing. (exclusion the exempt maintain production)

- Forest and paper
- Car washing machinery
- Chemical and environmental protection

Always chase the first since 1995

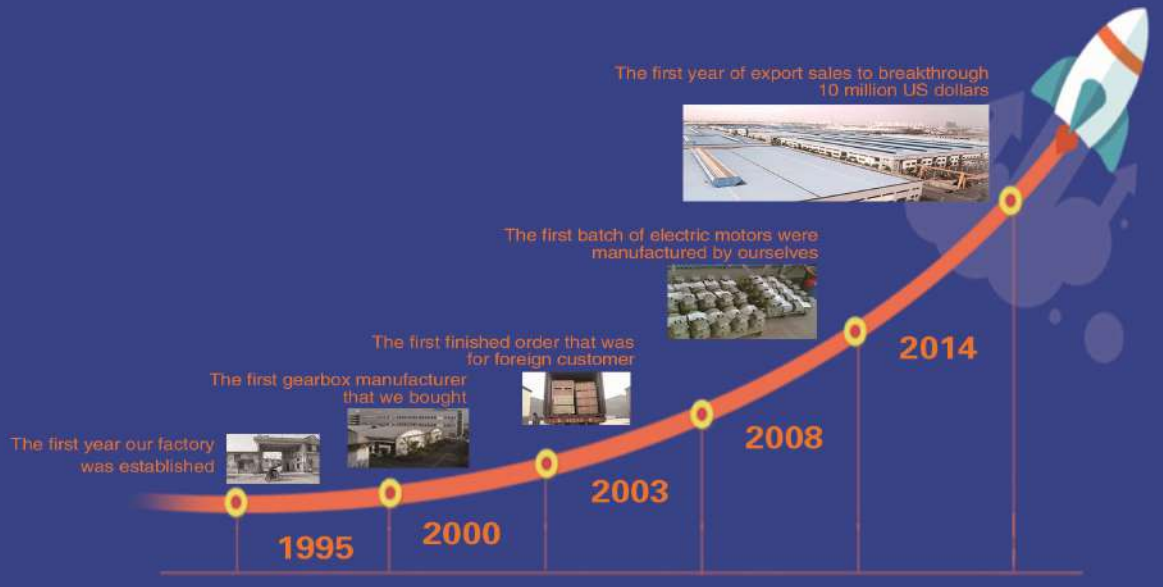

Tel:+86–535–6330966
Mobile:+86–18563806647
E–mail: info@sogears.com
Viber/Line/Whatsapp/Wechat: 008618563806647
Web: www.sogears. com(Skype: qingdao411)
Headquarters Address: Wujin, Changzhou City, Jiangsu Province,China